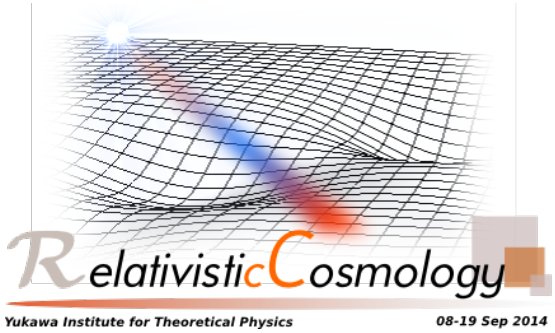

Based on arXiv:1310.4925

Primordial non-Gaussianity in large scale structure (LSS)

In Newtonian

~halo/galaxy bispectrum~

Shuichiro Yokoyama (Rikkyo University from this September)

with Taka Matsubara (Nagoya U.), Atsushi Taruya (YITP) and Ichihiko Hashimoto (YITP)

~ YITP workshop ``Relativistic Cosmology" 9th Sep. 2014 in panasonic hall ~

Contents

- Introduction

  - primordial non-Gaussianity after Planck –

- Primordial non-Gaussianity in LSS

  - scale-dependent bias –

- Halo/galaxy bispectrum with primordial nG

- Summary and Discussions

Intro –primordial non-Gaussianity-

from Planck team

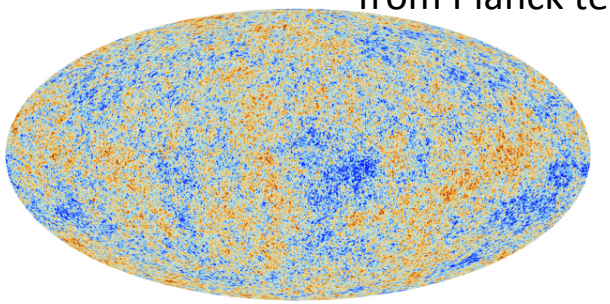

- Planck result in March, 2013

$$f_{\rm NL}^{\rm local} = 2.7 \pm 11.6$$ 95% CL

"local-type" non-linearity parameter defined as

$$\Phi = \Phi_{\rm G} + f_{\rm NL}^{\rm local}\left(\Phi_{\rm G}^2 - \langle\Phi_{\rm G}^2\rangle\right) + \cdots$$

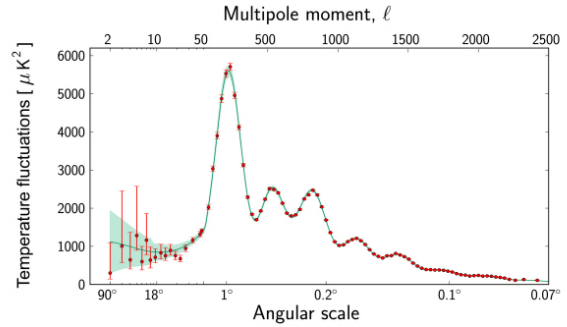

and also

$$f_{\rm NL}^{\rm equil},\ f_{\rm NL}^{\rm orth},$$

are strongly constrained.

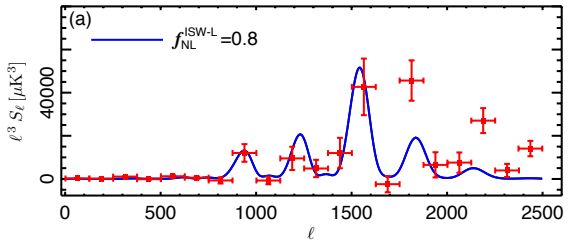

$$f_{\rm NL}^{\rm equil} = -42 \pm 150 \qquad f_{\rm NL}^{\rm ortho} = -25 \pm 78$$

arXiv:1303.5084

Intro –implications-

- Consistent with the standard single inflation

$$f_{\rm NL}^{\rm local} \ll 1$$

Maldacena (2003), …

- gives strong constraint on the curvaton model, …

e.g.,

curvaton; $0.15 < r < 1$

; ratio of energy density between curvaton and radiation at decay

Lyth and Wands (2002), Moroi and Takahashi (2002), Enqvist and Sloth (2002), …

modulated reheating; $-1.9 < \Gamma\Gamma''/\Gamma'^2 < 2.8$

; fluctuation of the inflaton decay rate

Zaldarriaga (2004), Kofman(2004), …

Suyama, Takahashi, Yamaguchi, SY (2013), Planck collaboration(2013), …

Intro – observational side for fNL -

- In CMB observations, cosmic variance limit

$$\Delta f_{\rm NL}^{\rm local} \simeq 3$$

e.g., Komatsu and Spergel (2003)

Cf. non-linearity in the late time evolution of the perturbation➔

$$f_{\rm NL}^{eff} = \mathcal{O}(1)$$

Ref. Koyama-san, Naruko-san, Hiramatsu-san's talks

- give up studying non-Gaussianity?

- $\Delta f_{\rm NL}^{\rm local} \ll 1$ in observations？？

21cm bispectrum? (Corray(2006), …)

- Large scale structure(LSS)?

It seems important as a cross-check, independent of the CMB observations.

Intro - Importance of higher order NG -

``higher-order non-Gaussianity”

Local-type; $f_{\rm NL},\ g_{\rm NL},\ \tau_{\rm NL}$

$f_{\rm NL}$; a parameter related with the primordial bispectrum (3-pt. func.)

$g_{\rm NL}$
$\tau_{\rm NL}$; parameters related with the primordial trispectrum (4-pt. func.)

$$\langle \Phi_{\mathbf{k}_1}\Phi_{\mathbf{k}_2}\Phi_{\mathbf{k}_3}\Phi_{\mathbf{k}_4}\rangle_{\rm c} = (2\pi)^3\delta^{(3)}(\mathbf{k}_1+\mathbf{k}_2+\mathbf{k}_3+\mathbf{k}_4)T_\Phi(\mathbf{k}_1,\mathbf{k}_2,\mathbf{k}_3,\mathbf{k}_4)$$

$$T_\Phi(k_1,k_2,k_3,k_4) = 6g_{\rm NL}\left[P_\Phi(k_1)P_\Phi(k_2)P_\Phi(k_3) + \ 3 \text{ perms.}\right]$$

$$+\frac{25}{9}\tau_{\rm NL}\left[P_\Phi(k_1)P_\Phi(k_2)P_\Phi(|\mathbf{k}_1+\mathbf{k}_3|) + \ 11 \text{ perms.}\right]$$

(Byrnes, Sasaki & Wands(2006), Boubekeur & Lyth(2006) …)

Intro - Importance of higher order NG -

fNL vs tauNL

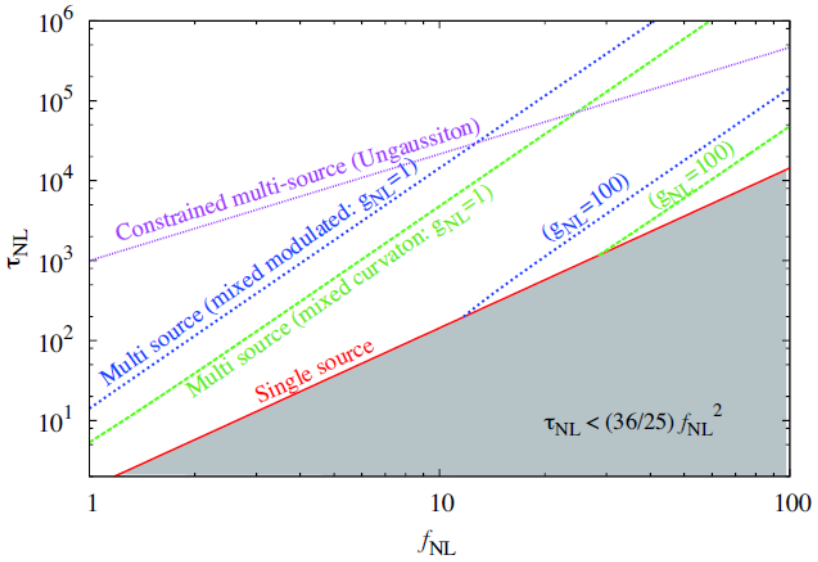

Different lines represent different models

distinguishing models !!!

(Suyama, Takahashi, Yamguchi and SY (2010))

fNL vs gNL

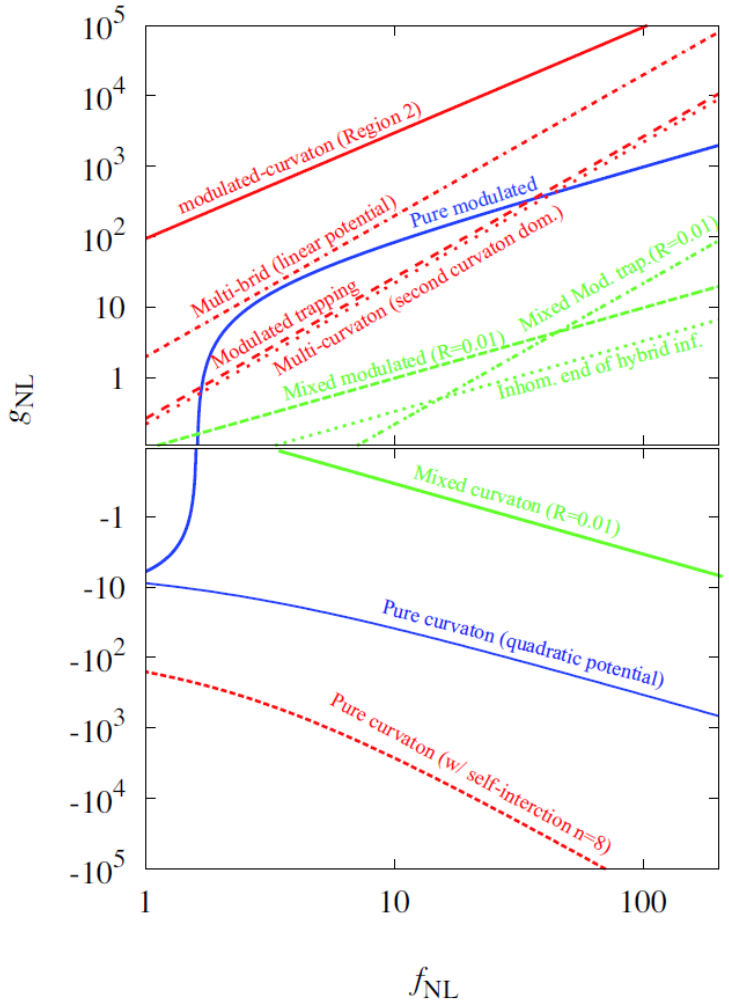

How accuracy can we measure these parameters with using cosmological observations?

Intro – observational side for gNL and tauNL -

$$f_{\rm NL}^{\rm local} = 2.7 \pm 11.6$$ 95% CL

$$\tau_{\rm NL} < 2800$$ 95% CL

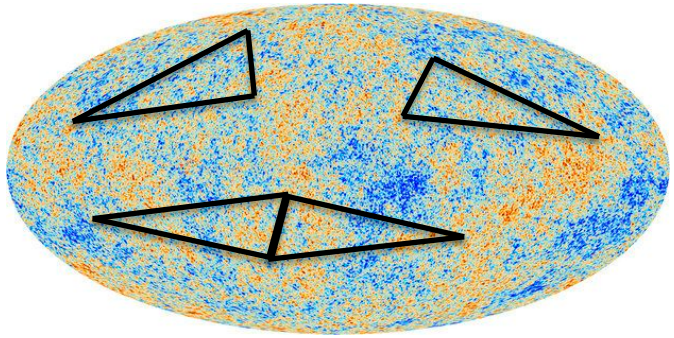

©Planck collaboration

Planck team has not reported the constraint on gNL, but by using WMAP data,

$$-7.4 < g_{\rm NL}/10^5 < 8.2$$ Smidt+(2010) (WMAP5)

$$-7.7 < g_{\rm NL}/10^5 < 1.1$$ Sekiguchi and Sugiyama (2013) (WMAP9) 95%CL

$$\Delta g_{\rm NL} = 6.7 \times 10^4$$ as a forecast for Planck sensitivity?

In the CMB observations, they can be constrained independently, in principle.

How about in the LSS observations?

Are LSS observations more powerful to probe higher order ??

Primordial non-Gaussianity in large scale structure

~ scale-dependent bias ~

Large scale structure (LSS) with primordial non-Gaussianity (NG)

- Number count of collapsed objects

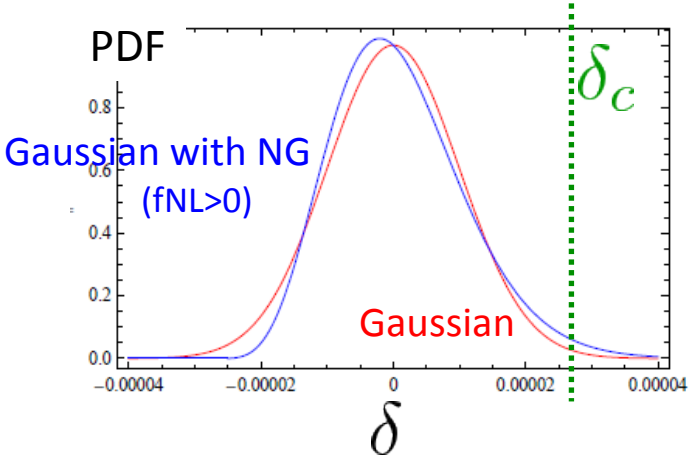

fNL ➔ skew in the distribution function

$\delta > \delta_c$ ➔ Collapse !!

Threshold of the formation of the collapsed object

Modification in the halo mass function

- Scale-dependent bias

Due to the non-linear coupling,
halo clustering behavior is affected.

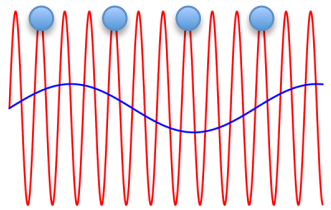

Gaussian

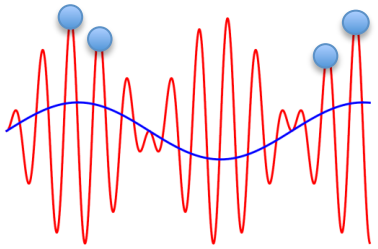

non-Gaussian

➔ Bias parameter could have scale-dependence even on the large scales. (Gaussian ➔ scale-independent)

Scale-dependent bias

- scale-dependent bias is powerful?

see e.g., Dalal+(2008), Matarrese and Verde (2008)

$$P_{hh}(k) = \left(b^E_{eff}\right)^2 P_{mm}(k)$$

$$b^E_{eff}(k, z, f_{\rm NL}) = b^E_G + 3 f_{\rm NL}(b^E_G - 1)\frac{H_0^2 \Omega_m \delta_c(z)}{c^2 T(k) k^2}$$

Effect of non-Gaussianity

Scale-dependence

becomes large on larger scales (k→0)

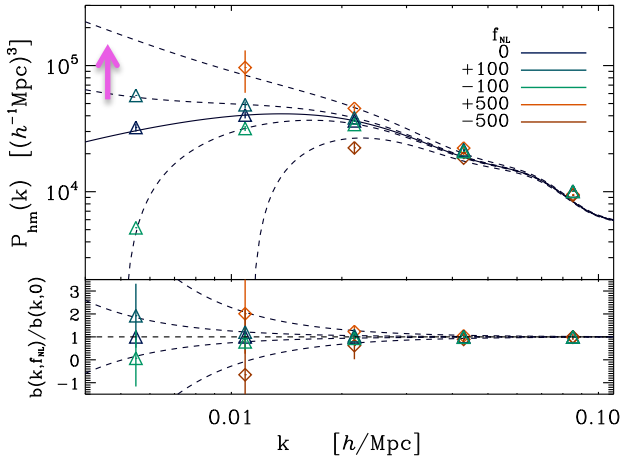

In last year, arXiv:1310.6716

Search for primordial non-Gaussianity in the quasars of SDSS-III BOSS DR9

D. Karagiannis[1⋆], T. Shanks[1], Nicolas P. Ross[2,3]

[1] *Physics Department, University of Durham, South Road, Durham, DH1 3LE, UK*

[2] *Lawrence Berkeley National Laboratory, 1 Cyclotron Road, Berkeley, CA 94720, USA*

[3] *Department of Physics, Drexel University, 3141 Chestnut Street, Philadelphia, PA 19104, USA*

$$46 < f^{\rm local}_{\rm NL} < 158 \text{ at } 95\%$$

Scale-dependent bias with fNL, gNL, tauNL

Desjacques and Seljak (2010),
SY and Matsubara (2012), …

$$\left(b^{\rm E}_{eff}\right)^2 := b_1(M)^2 + \Delta b(k)$$

M; mass of the biased object

Poisson equation;

$$\delta = \mathcal{M}(k)\Phi$$

$$\mathcal{M}(k) \propto k^2$$

Scale-dependent part;

$$\Delta b(k) \approx 4 f_{\rm NL} \frac{b_1(M)}{\mathcal{M}(k)}\, b_{f_{NL}} \longrightarrow 1/k^2 \text{ -dependence}$$

$$+\left(g_{\rm NL} + \frac{25}{27}\tau_{\rm NL}\right)\frac{b_1(M)}{\mathcal{M}(k)}\, b_{g_{NL}} \longrightarrow 1/k^2 \text{ -dependence}$$

$$+\frac{25}{9}\tau_{\rm NL}\frac{1}{\mathcal{M}(k)^2}\, b_{\tau_{NL}} \longrightarrow 1/k^4 \text{ -dependence}$$

GR effect on large scales??

- Mimic a scale-dependent bias

David's morning talk

Ref. Jeong, Schmidt, Hirata; PRD 85, 023504 (2012)
Bonvin & Durrer (2011), Challinor & Lewis (2011)
Yoo et al. (2010), Maartens et al.(2012), …

$$\frac{\tilde{\delta}_g}{\delta_m} = b + f\mu^2 + \frac{\mathcal{A}}{x^2} + \frac{i\mu}{x}\mathcal{B}, \quad \text{; bias}$$

Scale-dependence

$$x \equiv k/aH$$

$$\mathcal{A} = \frac{3}{2}\Omega_m\left[b_e\left(1 - \frac{2f}{3\Omega_m}\right) + 1 + \frac{2f}{\Omega_m} + \mathcal{C} - f - 2\mathcal{Q}\right]$$

observed fluctuations = actual density fluctuations
+ gravitational potential

Poisson eq. ; $\Phi \sim \frac{\delta}{k^2}$

GR effect

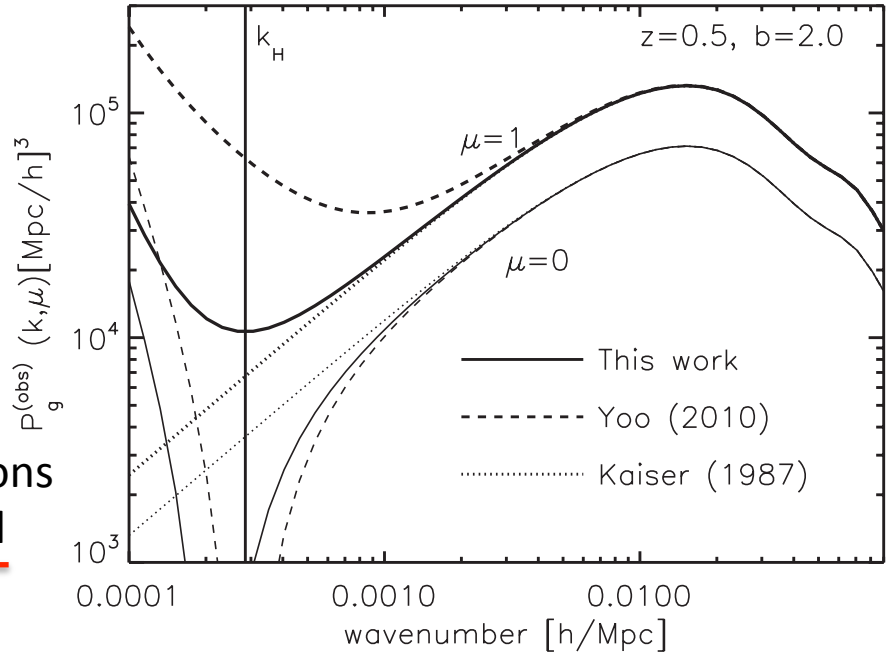

also non-linear evolution in GR is important David's talk

Summary of current constraint by using scale-dependent bias

- Slosar et al. (2008), arXiv:0805.3580

$$-29 < f_{\rm NL}^{\rm loc} < 70$$ 95% CL

- Giannatonio et al. (2013), arXiv:1303.1349

$$-36 < f_{\rm NL}^{\rm loc} < 45$$ 95% CL

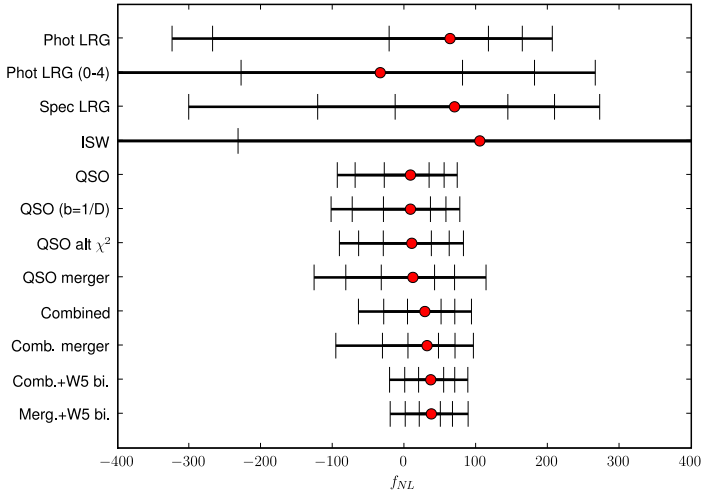

cross-correlations between a large number of observations, CMB, optical, radio,…

- Ross et al. (2012), arXiv:1208.1491

$$-82 < f_{\rm NL}^{\rm local} < 178$$ 95% CL SDSS-III DR9

- For gNL, Desjacques and Seljak (2010), arXiv:1003.5020

$$-3.5 \times 10^5 < g_{\rm NL}^{\rm loc} < +8.2 \times 10^5$$ 95% CL

Beyond halo/galaxy power spectrum
- halo/galaxy bispectrum-

In Newtonian

Mainly we discuss the local-type primordial non-Gaussianity.

Halo/galaxy bispectrum with primordial nG

- Related works

  - Peak formalism (+ Eulerian local bias ansatz);
    Jeong and Komatsu (2009), Sefusatti and Komatsu (2007), Sefusatti (2009), …

    expected $\Delta f_{NL} \sim O(10)$ …

  - Peak-background split picture;
    Baldauf, Seljak and Senatore (2011), …

  - N-body simulation;
    Nishimichi, Taruya, Koyama and Sabiu (2010), …

How to discriminate the primordial non-Gaussianity from gravitational non-linearity and also include higher order loop contribution ??

We use a diagrammatic approach
based on integrated Perturbation Theory

constructed by T. Matsubara (2011,2012,2013)

Integrated Perturbation Theory (iPT)

Matsubara (2011,2012,2013)

Bernardeau+(2008)

- Multi-point propagator

$$\left\langle \frac{\delta^n \delta_X(\mathbf{k})}{\delta\delta_{\rm L}(\mathbf{k}_1)\delta\delta_{\rm L}(\mathbf{k}_2)\cdots\delta\delta_{\rm L}(\mathbf{k}_n)} \right\rangle = (2\pi)^{3-3n}\delta(\mathbf{k}_1+\mathbf{k}_2+\cdots+\mathbf{k}_n)\Gamma_X^{(n)}(\mathbf{k}_1,\mathbf{k}_2,\cdots,\mathbf{k}_n)$$

δ_X ; number density field of the biased objects

$\delta_{\rm L}$; initial linear density field

gravitational evolution, non-local bias, RSD, ⋯

is powerful for small scales.

- + initial power-, bi-, tri-, ⋯ spectra

$$\langle \delta_{\rm L}(\mathbf{k}_1)\delta_{\rm L}(\mathbf{k}_2)\rangle = (2\pi)^3\delta(\mathbf{k}_1+\mathbf{k}_2)P_{\rm L}(k_1),$$

$$\langle \delta_{\rm L}(\mathbf{k}_1)\delta_{\rm L}(\mathbf{k}_2)\delta_{\rm L}(\mathbf{k}_3)\rangle = (2\pi)^3\delta(\mathbf{k}_1+\mathbf{k}_2+\mathbf{k}_3)B_{\rm L}(k_1,k_2,k_3), \propto f_{\rm NL}$$

$$\langle \delta_{\rm L}(\mathbf{k}_1)\delta_{\rm L}(\mathbf{k}_2)\delta_{\rm L}(\mathbf{k}_3)\delta_{\rm L}(\mathbf{k}_4)\rangle = (2\pi)^3\delta(\mathbf{k}_1+\mathbf{k}_2+\mathbf{k}_3+\mathbf{k}_4)T_{\rm L}(k_1,k_2,k_3,k_4). \propto g_{\rm NL},\ \tau_{\rm NL}$$

→ Peak object (halo/galaxy) power-, bi-, ⋯ spectra

SY, Matsubara and Taruya, arXiv:1310.4925

Construction of diagrams

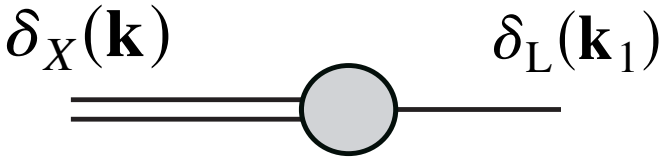

$$\Gamma_X^{(1)}(\mathbf{k})\,\delta^{(3)}(\mathbf{k}_1-\mathbf{k})$$

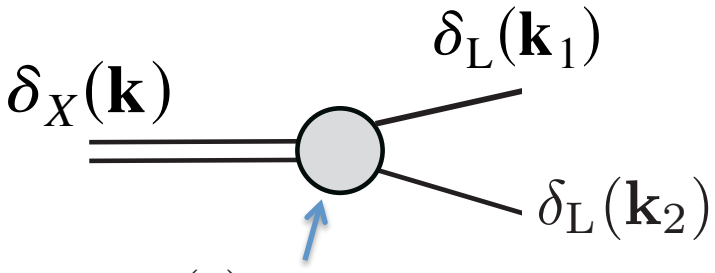

$$\Gamma_X^{(2)}(\mathbf{k}_1,\mathbf{k}_2)\,\delta^{(3)}(\mathbf{k}_1+\mathbf{k}_2-\mathbf{k})$$

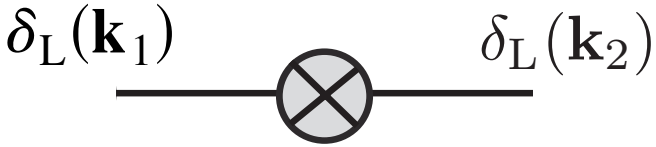

$$\delta(\mathbf{k}_1+\mathbf{k}_2)P_{\rm L}(k_1)$$

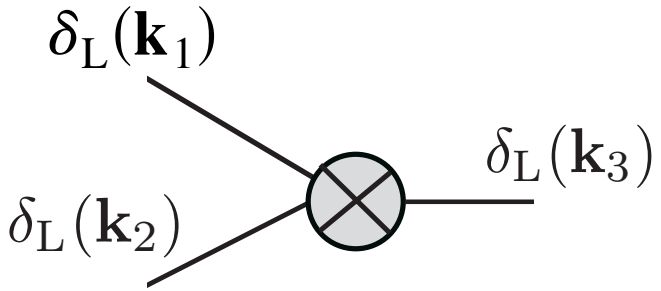

$$\delta(\mathbf{k}_1+\mathbf{k}_2+\mathbf{k}_3)B_{\rm L}(k_1,k_2,k_3)$$

- Halo/galaxy bispectrum

Up to the tree level,

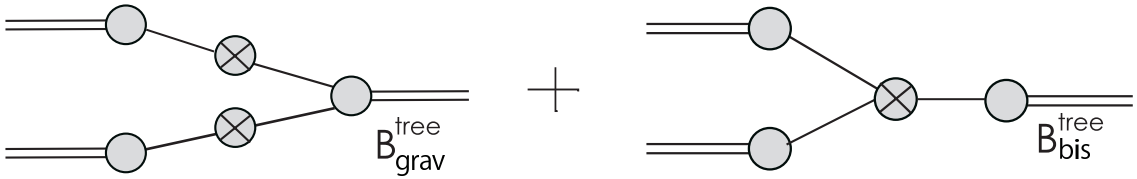

$$B^{\rm tree}_{\rm grav} = \left[\Gamma^{(1)}_X(\mathbf{k}_1)\Gamma^{(1)}_X(\mathbf{k}_2)\Gamma^{(2)}_X(-\mathbf{k}_1,-\mathbf{k}_2)P_{\rm L}(k_1)P_{\rm L}(k_2) + 2\ \text{perms.}\right]$$; gravitational non-linearity

$$B^{\rm tree}_{\rm bis} = \Gamma^{(1)}_X(\mathbf{k}_1)\Gamma^{(1)}_X(\mathbf{k}_2)\Gamma^{(1)}_X(\mathbf{k}_3)B_{\rm L}(\mathbf{k}_1,\mathbf{k}_2,\mathbf{k}_3),$$; fNL - contribution

- Halo/galaxy bispectrum

Up to the one-loop order

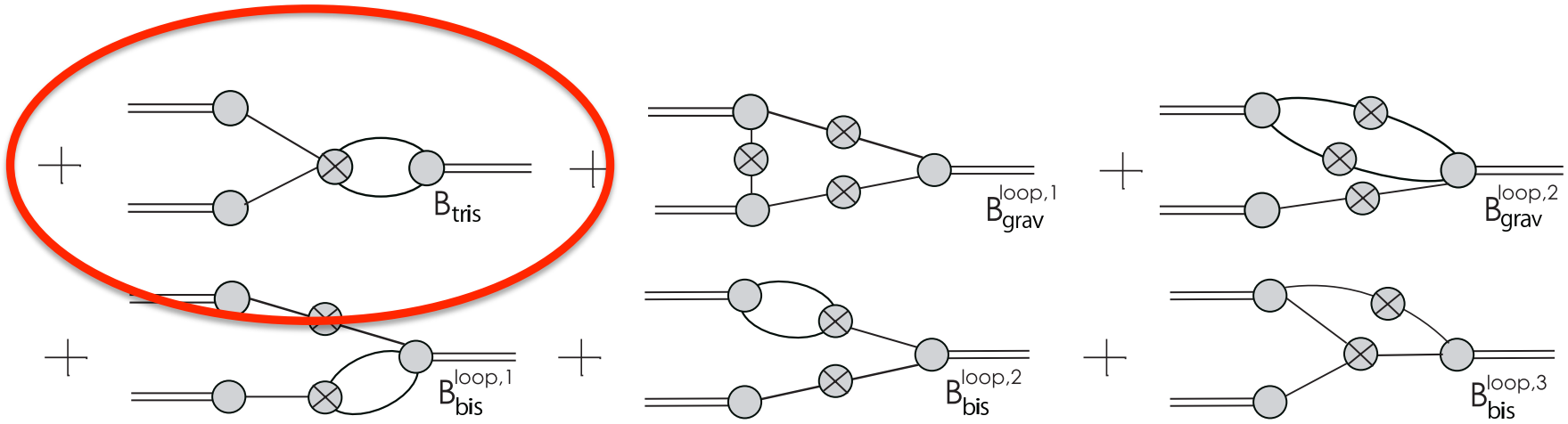

$$B_{\rm tris} = \frac{1}{2}\Gamma_X^{(1)}(\mathbf{k}_1)\Gamma_X^{(1)}(\mathbf{k}_2)\int\frac{d^3p}{(2\pi)^3}\Gamma_X^{(2)}(\mathbf{p},\mathbf{k}_3-\mathbf{p})T_{\rm L}(\mathbf{k}_1,\mathbf{k}_2,\mathbf{p},\mathbf{k}_3-\mathbf{p}) + 2\ \text{perms.}$$

; gNL, tauNL – cont.

- Halo/galaxy bispectrum

First we focus on

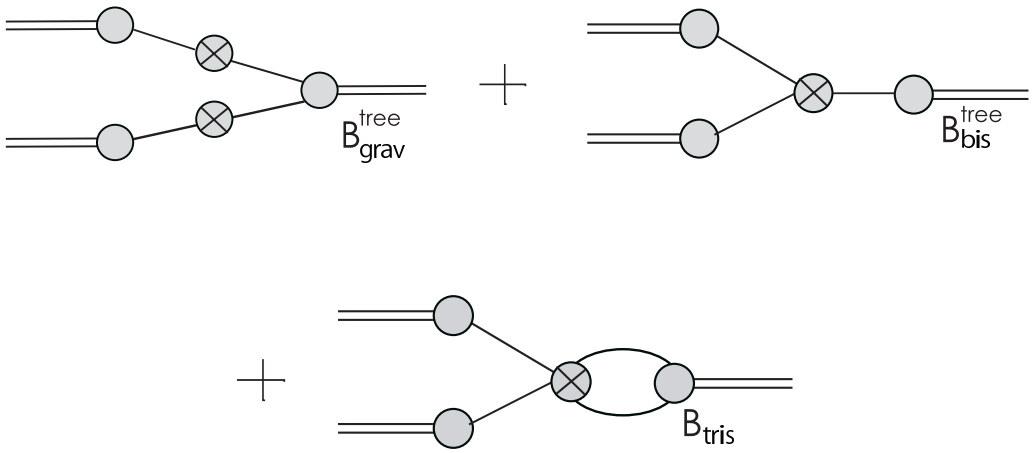

$$B^{\rm tree}_{\rm grav} = \left[\Gamma^{(1)}_X(\mathbf{k}_1)\Gamma^{(1)}_X(\mathbf{k}_2)\Gamma^{(2)}_X(-\mathbf{k}_1,-\mathbf{k}_2)P_{\rm L}(k_1)P_{\rm L}(k_2) + 2\ \text{perms.}\right]$$; gravitational non-linearity

$$B^{\rm tree}_{\rm bis} = \Gamma^{(1)}_X(\mathbf{k}_1)\Gamma^{(1)}_X(\mathbf{k}_2)\Gamma^{(1)}_X(\mathbf{k}_3)B_{\rm L}(\mathbf{k}_1,\mathbf{k}_2,\mathbf{k}_3),$$; fNL - contribution

$$B_{\rm tris} = \frac{1}{2}\Gamma^{(1)}_X(\mathbf{k}_1)\Gamma^{(1)}_X(\mathbf{k}_2)\int\frac{d^3p}{(2\pi)^3}\Gamma^{(2)}_X(\mathbf{p},\mathbf{k}_3-\mathbf{p})T_{\rm L}(\mathbf{k}_1,\mathbf{k}_2,\mathbf{p},\mathbf{k}_3-\mathbf{p}) + 2\ \text{perms.}$$; gNL, tauNL – cont.

- Shapes of the bispectrum in k-space

Peak at
k1=k2=k3
(equilateral)

gravitational

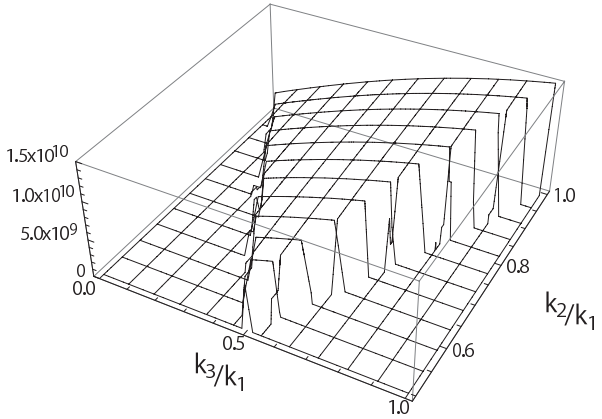

fNL - cont

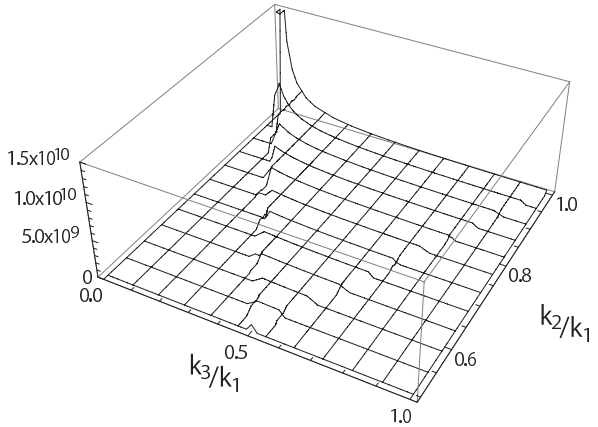

gNL - cont

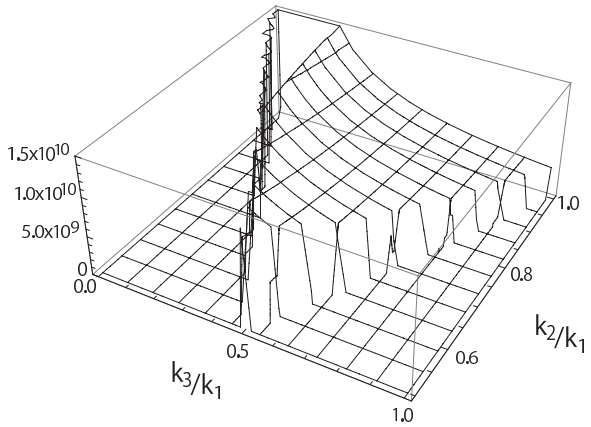

tauNL

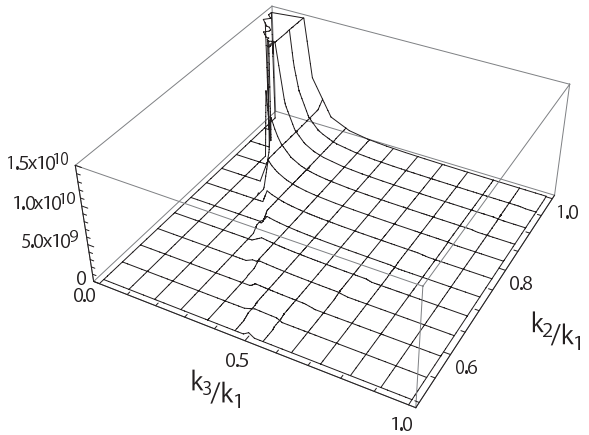

For the local-type, all contributions have a peak at $k_3 \ll k_1 \simeq k_2$

Ref. Jeong and Komatsu (2009)

- Bispectrum on large scales (k → 0)

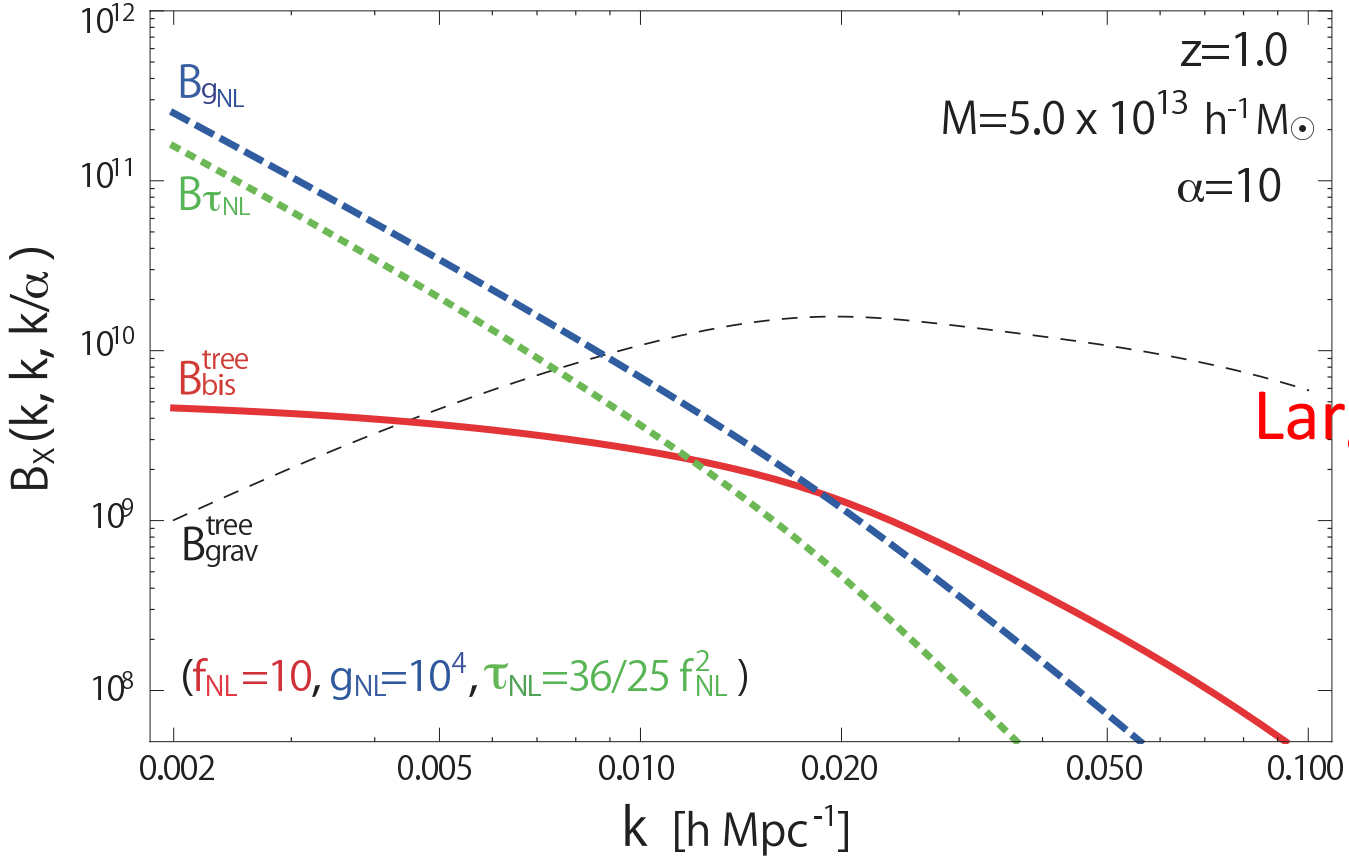

Large scales !!!

isosceles configuration given by $k \equiv k_1 = k_2 = \alpha k_3$

(large α corresponds to squeezed limit)

k → 0 limit

$$B^{\rm tree}_{\rm grav} \propto k^2, \;\; B^{\rm tree}_{\rm bis} \propto k^0, \;\; B_{g_{\rm NL}} \propto k^{-2}, \;\; B_{\tau_{\rm NL}} \propto k^{-2}$$

- Halo/galaxy bispectrum

Up to the one-loop order

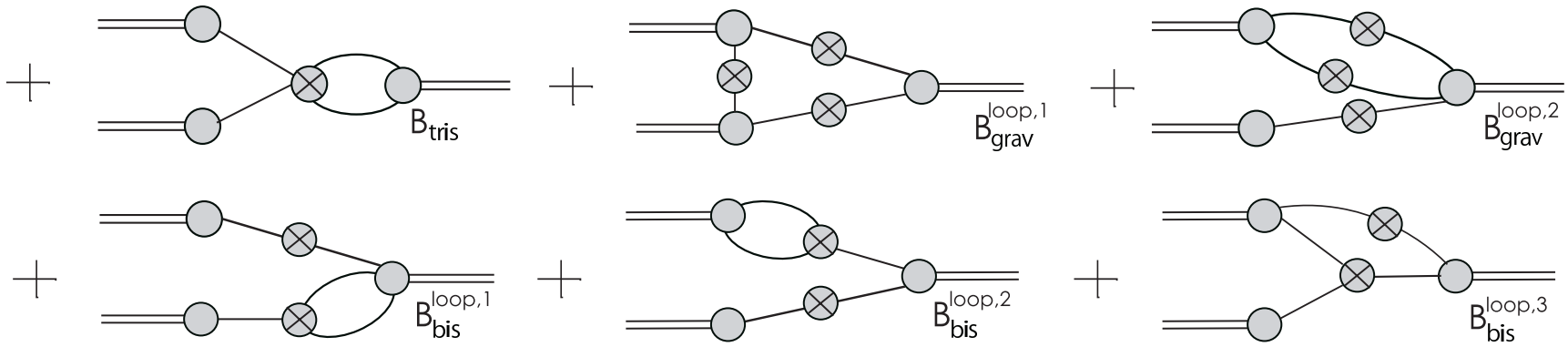

Lower three diagrams depend on the primordial bispectrum.

- Other one-loop contributions

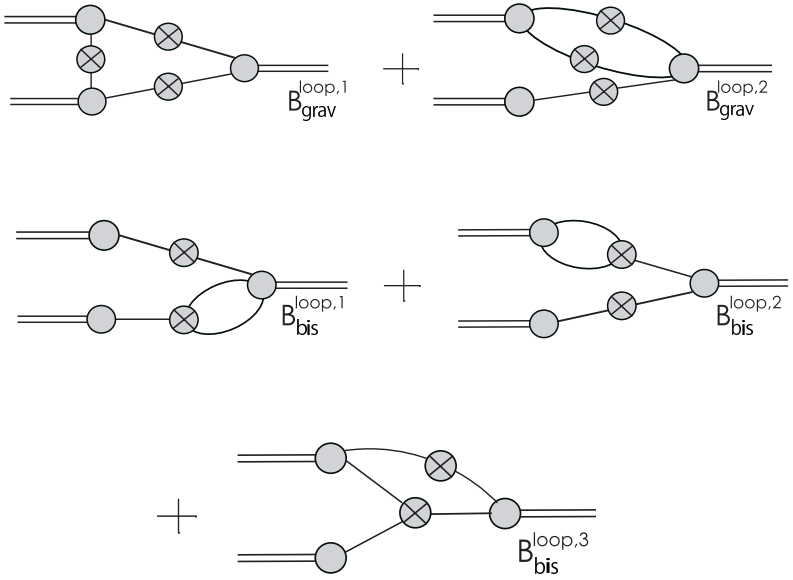

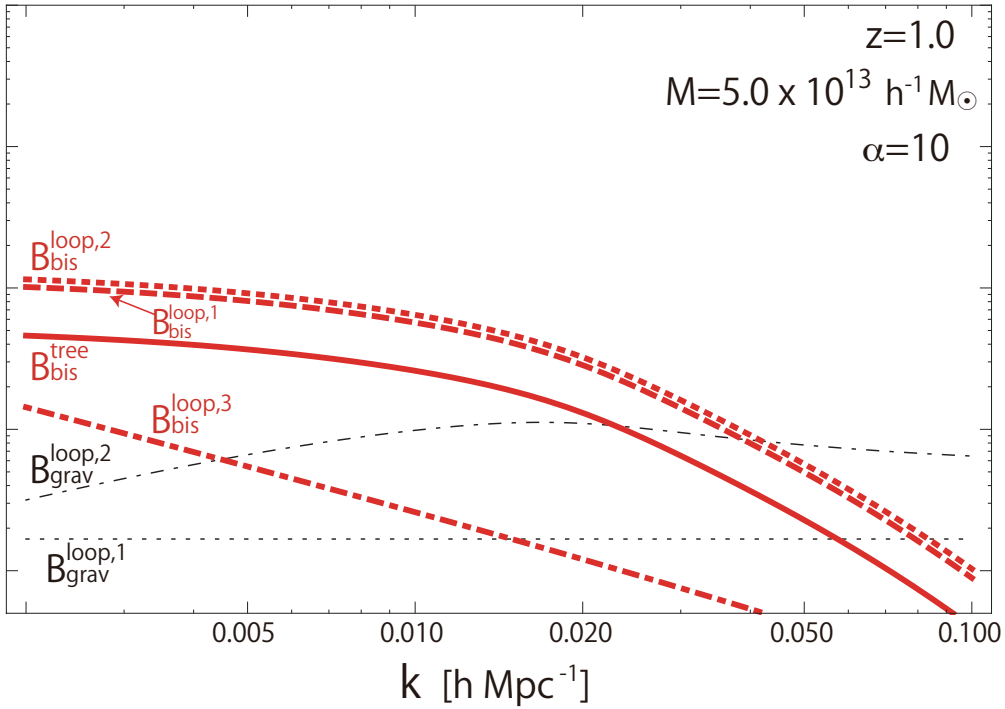

$B_{\rm bis}^{\rm loop,1}$, $B_{\rm bis}^{\rm loop,2}$ are ``one-loop contribution" which seems to be dominant

$B_{\rm grav}^{\rm loop,1}$, $B_{\rm grav}^{\rm loop,2}$, $B_{\rm bis}^{\rm loop,3}$ seems to be sub-dominant contribution

How can we find dominant or subdominant ?

- “un-decomposable”, “decomposable”

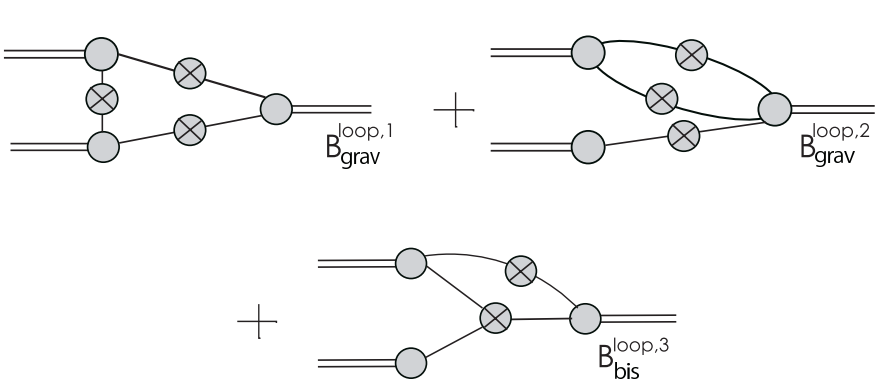

Sub-dominant

“decomposable”

decomposable?

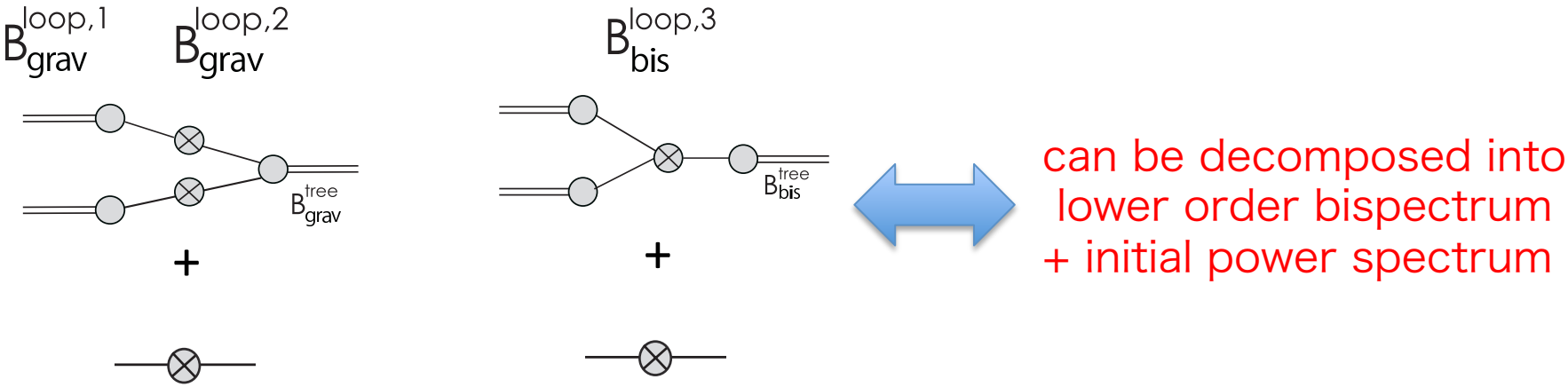

can be decomposed into
lower order bispectrum
+ initial power spectrum

- “un-decomposable”, “decomposable”

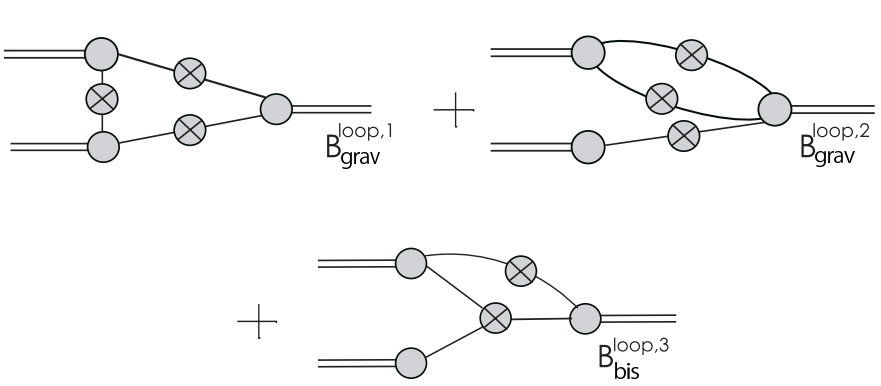

Sub-dominant

“decomposable”

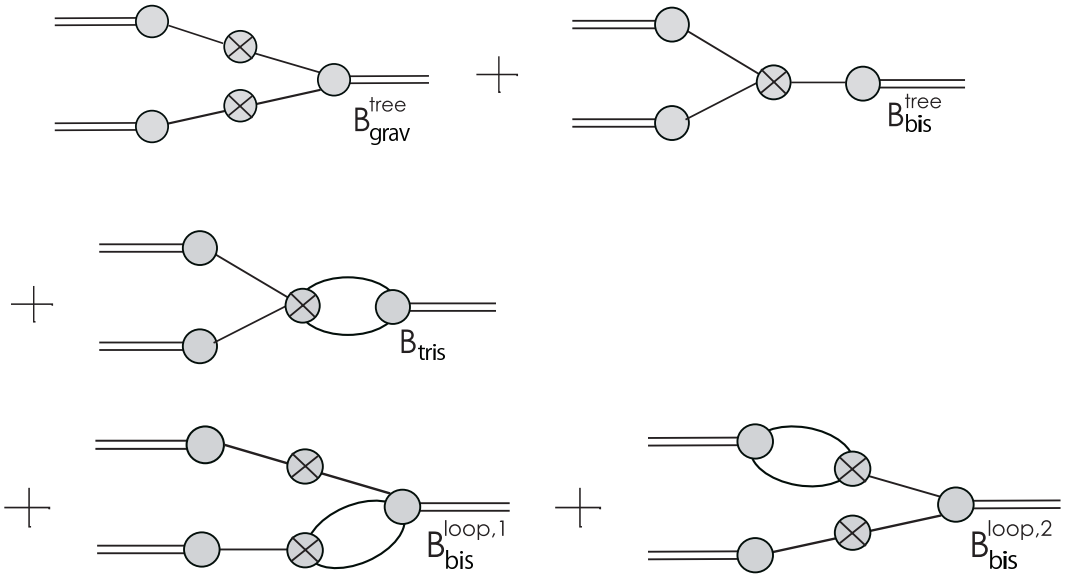

Dominant cont.

“un-decomposable”

- Halo/galaxy power spectrum

SY and Matsubara (2012)

tree

$$P^{\rm tree} = [\Gamma_X^{(1)}(\mathbf{k})]^2 P_{\rm L}(k)$$

one-loop 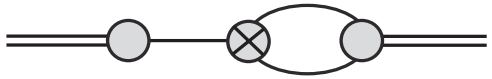

$$P^{\rm 1loop}_{f_{\rm NL}} = \Gamma_X^{(1)}(\mathbf{k}) \int \frac{d^3p}{(2\pi)^3} \Gamma_X^{(2)}(\mathbf{p}, \mathbf{k}-\mathbf{p}) B_{\rm L}(\mathbf{k}, -\mathbf{p}, -\mathbf{k}+\mathbf{p})$$

Scale-dependent bias term

$\propto P^{\rm tree} \times k^{-2}$

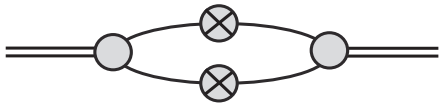

$$P^{\rm 1loop} = \int \frac{d^3p}{(2\pi)^3} \Gamma_X^{(2)}(\mathbf{p}, \mathbf{p}-\mathbf{k})^2 P_{\rm L}(p) P_{\rm L}(|\mathbf{k}-\mathbf{p}|)$$

two-loop 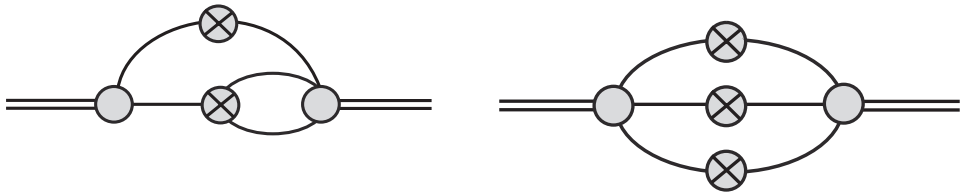

In the power spectrum、”decomposable”-diagrams ($P^{\rm 1loop}$ and two loop terms) are suppressed on large scales !!

cf. other two-loops from primordial trispec.

$\propto f_{\rm NL}^2$ or $\tau_{\rm NL}$ $\propto g_{\rm NL}$

$g_{\rm NL} \gtrsim 10^5 \times f_{\rm NL}$

- Scale-dependence of halo bispectrum on large scales

un-decomposable for $k \equiv k_1 = k_2 = \alpha k_3$

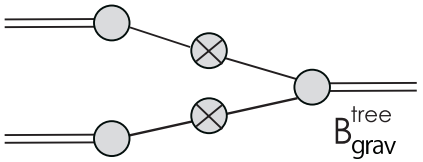

➔ $P^{\rm tree} \times P^{\rm tree} \propto k^2$

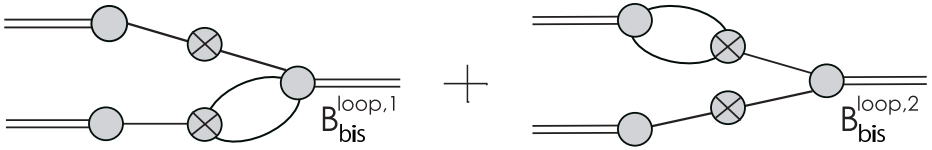

➔ $P^{\rm tree} \times P^{\rm 1loop}_{f_{\rm NL}} \propto k^0$

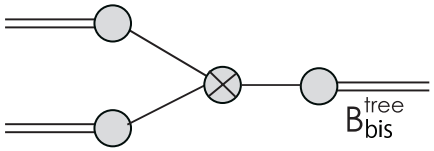

➔ $\propto k^0$

corresponds to the case

$P^{\rm tree} \leftrightarrow P^{\rm 1loop}_{f_{\rm NL}}$

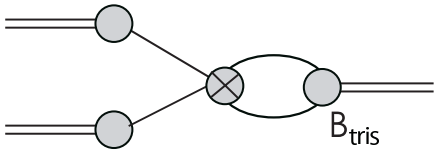

➔ $B^{\rm tree}_{\rm bis} + \ {\rm loop} \propto k^{-2}$

As in the above, we can understand the scale-depedence!

- “un-decomposable” 2-loop contribution

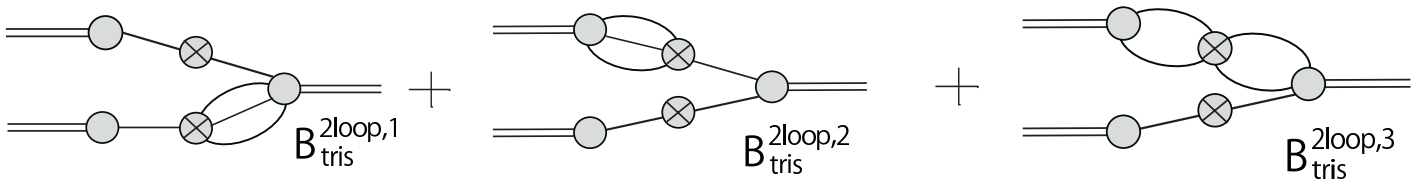

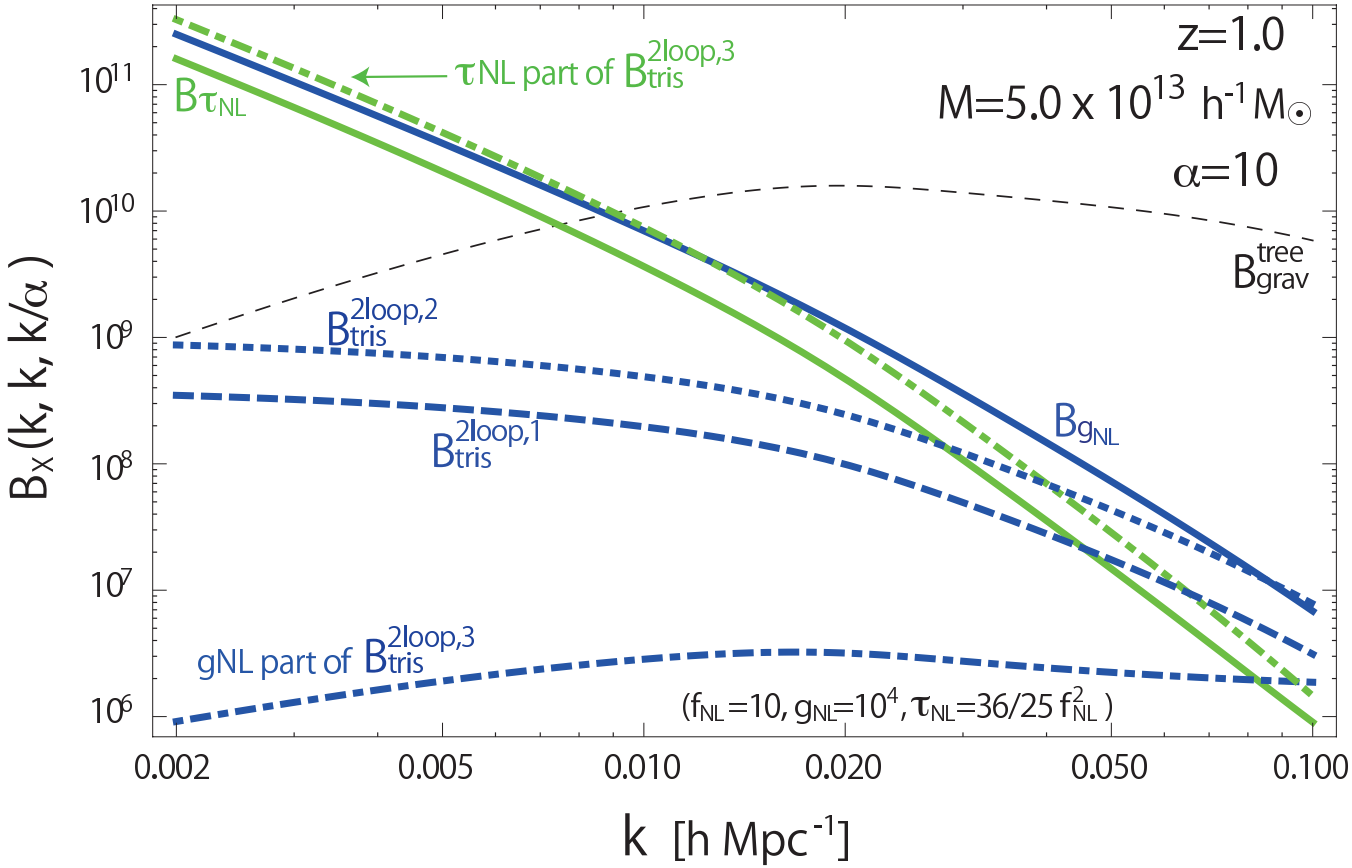

- “un-decomposable” 2-loop contribution

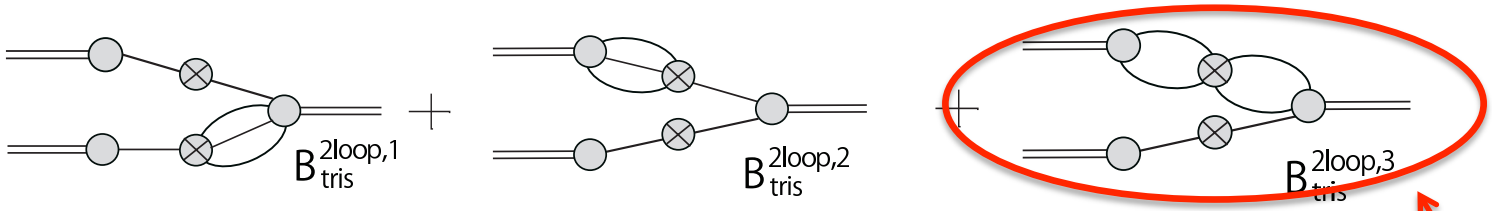

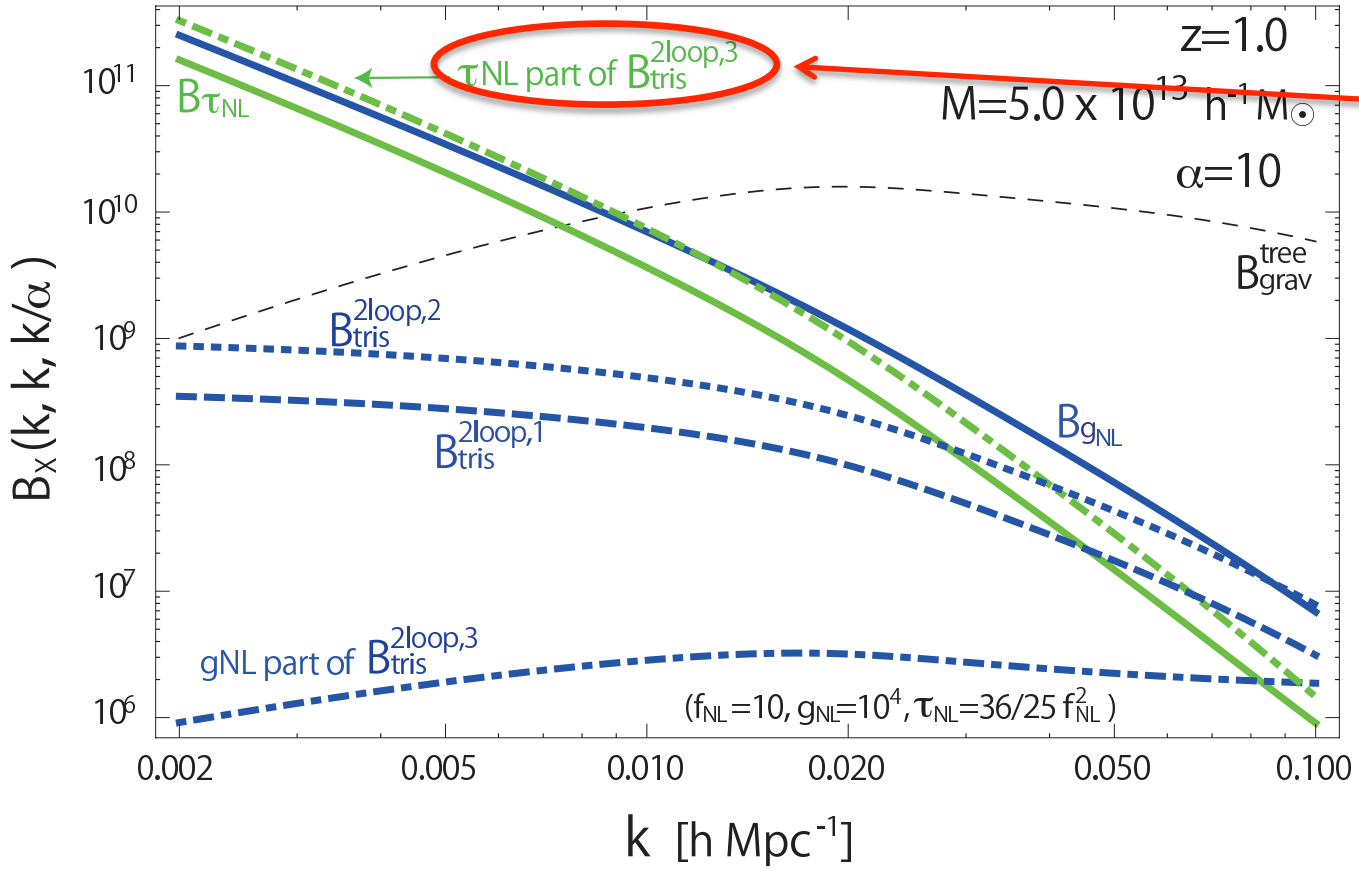

Dominant contribution

Full bispectrum

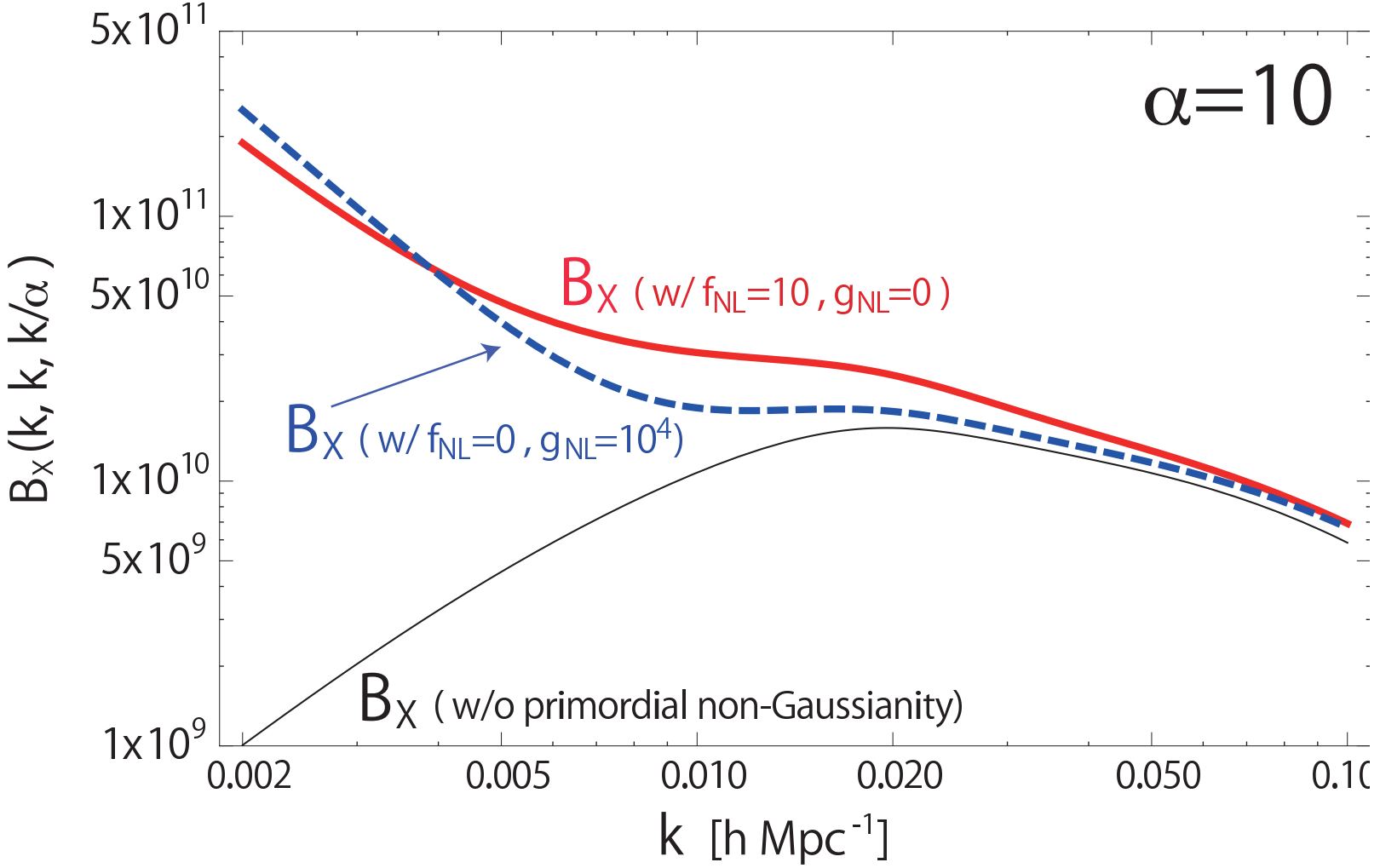

b1 = 3.5

Halo/galaxy bispectrum with primordial nG

- Related works

  - Peak formalism (+ Eulerian local bias ansatz);
    Jeong and Komatsu (2009), Sefusatti and Komatsu (2007), Sefusatti (2009)

  - Peak-background split picture;
    Baldauf, Seljak and Senatore (2011),

  - N-body simulation;
    Nishimichi, Taruya, Koyama and Sabiu (2010),

We use a diagrammatic approach
based on integrated Perturbation Theory

constructed by T. Matsubara (2011,2012,2013)

Relation between each formalism

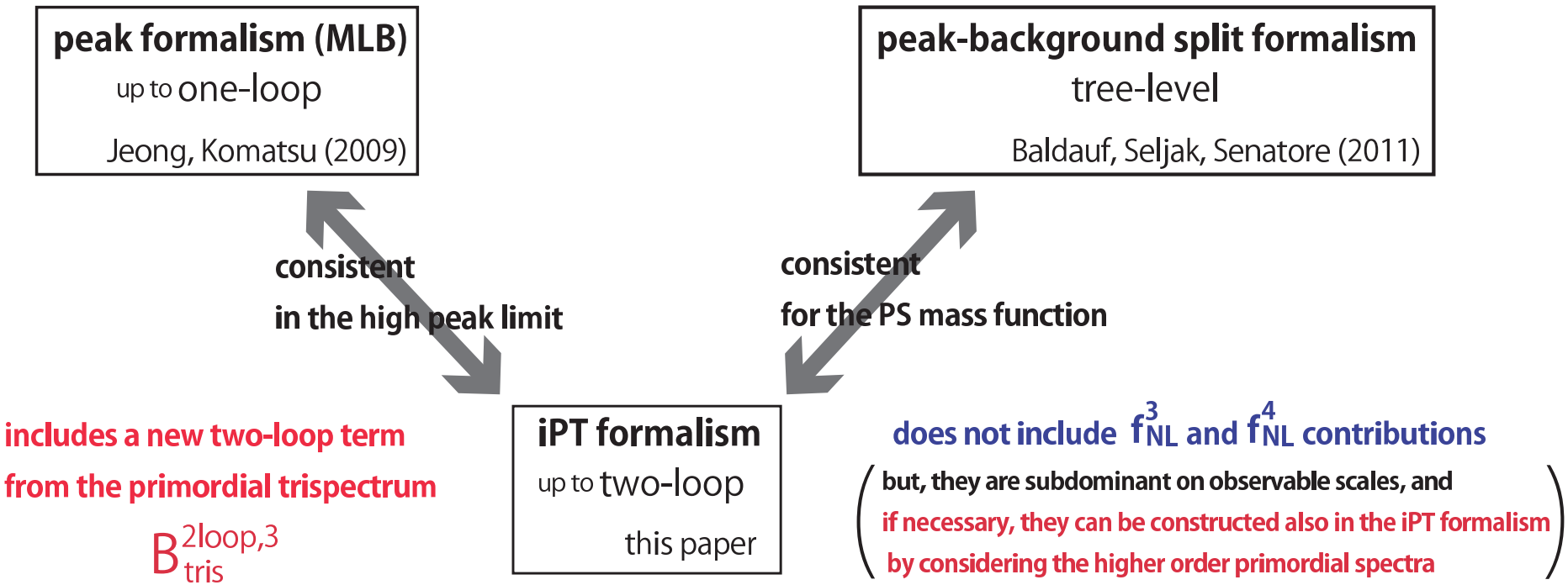

SY, Matsubara and Taruya (2013)

Discussion

- Equilateral, orthogonal

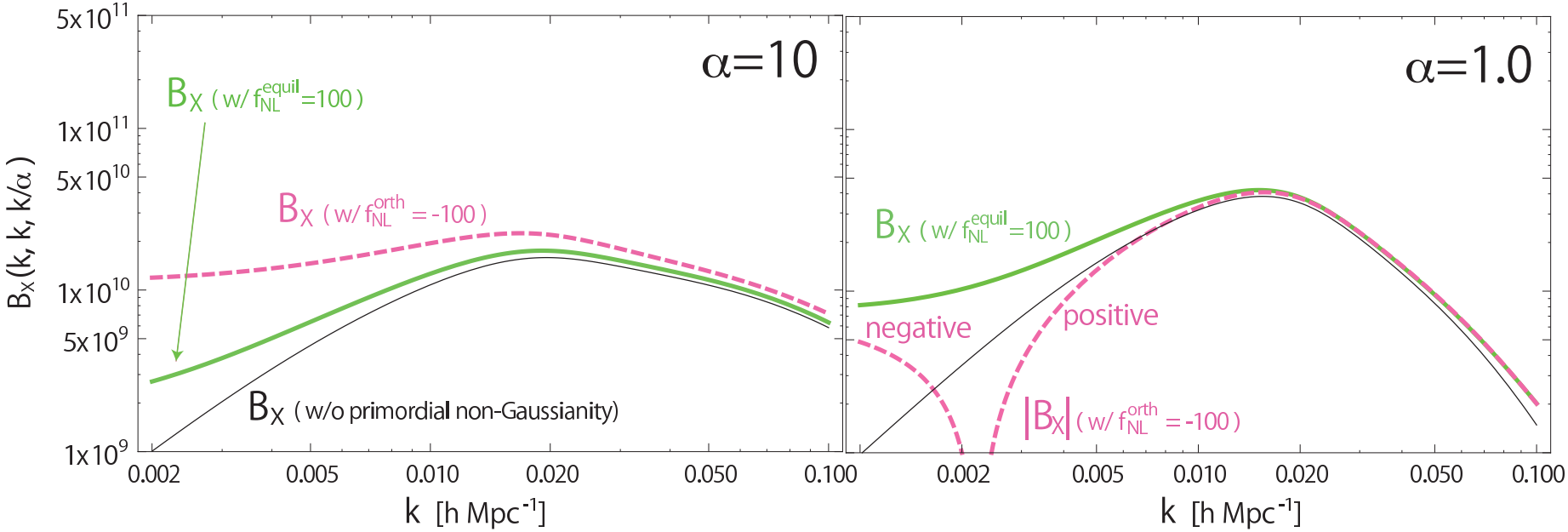

We can also investigate the effects of the equilateral and orthogonal types.

$$\Delta f_{\rm NL}^{\rm equil} \sim O(10)?$$

Sefusatti and Komatsu (2007)

Discussion ~preliminary~

- gNL?

Assuming a survey of $V = L^3 = 10h^{-3}\mathrm{Gpc}^3$ ($k_\mathrm{f} = 2.9 \times 10^{-3} h\mathrm{Mpc}^{-1}$) and $\bar{n} = 10^{-4}h^3\mathrm{Mpc}^{-3}$ for the typical redshift and the mass of halos as $z = 1$ and $M = 5 \times 10^{13}h^{-1}M_\odot$, we plot $(S/N)^2$ for $g_\mathrm{NL} = 10^4$ in Fig. 18 as a function of k_max ($k_i = k_\mathrm{min} + (i-1)\delta k \leq k_\mathrm{max}$ with $k_\mathrm{min} = k_\mathrm{f}$).

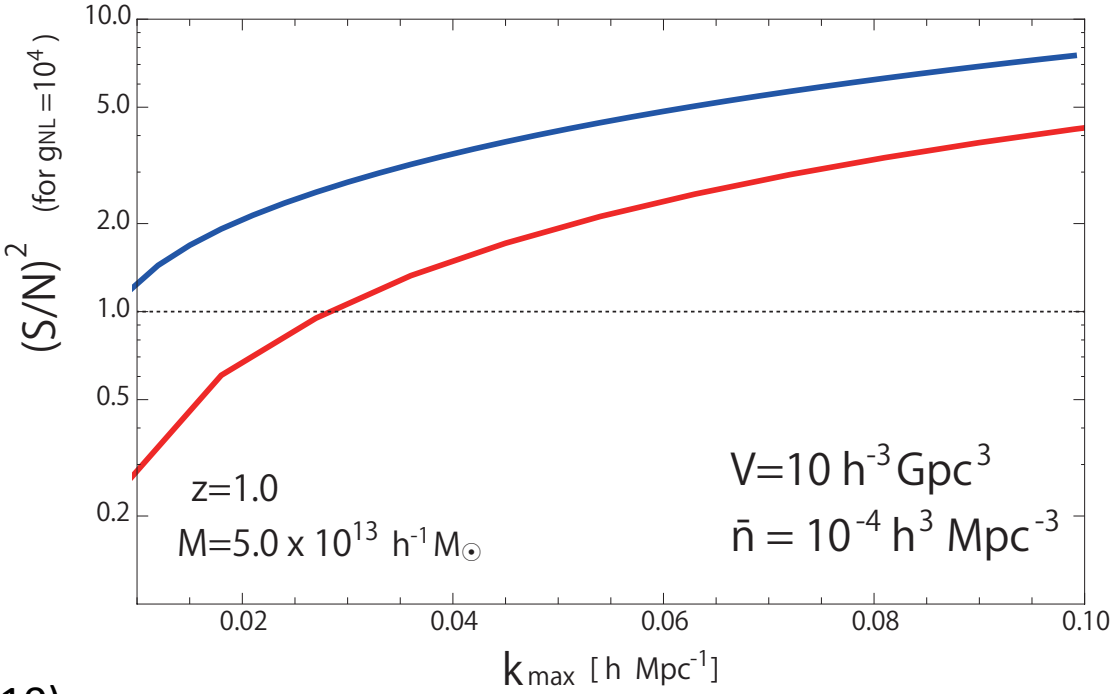

Ref. Nishimichi+(2010)

survey	z	$V\,[h^{-3}\mathrm{Gpc}^3]$	$n_\mathrm{g}\,[h^3\mathrm{Mpc}^{-3}]$	$M_\mathrm{min}\,[h^{-1}M_\odot]$	b_1
IDEAL	1.0	100	1×10^{-3}	2.8×10^{12}	1.9
REALISTIC	1.0	10	5×10^{-4}	5.0×10^{12}	2.2
DEEP	2.0	3	3×10^{-4}	3.4×10^{12}	3.3

The red line is for $\delta k = 3k_\mathrm{f}$ and the blue line is for $\delta k = k_\mathrm{f}$

Euclid?
SuMiRe?

Δ gNL = 10^4 is possible ?

Summary

- We consider the halo/galaxy bispectrum, making use of a diagrammatic approach, focusing on the primordial non-Gaussianity.
- we can systematically formulate the bispectrum.
- we believe that large scale structure observations should be also a powerful tool to probe the primordial non-Gaussianity.

Future issues;
Comparing with N-body simulation, “equilateral” trispectrum?, halo-matter-matter cross-bispectrum?, tomography?, High-z 21cm fluctuations?, GR effect in halo bispectrum…

in progress with
Ichihiko Hashimoto

Discussion

- Any other possibility of obtaining constraints on the non-linearity parameters from LSS observations?
- Any other parametrization of the primordial non-Gaussianity?
- Can we touch the level of gNL < O(10) observationally?
- Can we touch the level of fNL ~ O(0.01) observationally?

  (standard single slow-roll model predicts fNL = O(0.01))
- much higher order non-Gaussianity is needed?

- fNL vs tauNL ; inequality $\tau_{\rm NL} \geq \left(\frac{6}{5} f_{\rm NL}\right)^2$

Suyama and Yamaguchi (2008)

Introducing a stochasticity parameter;

$$r(k) \equiv \frac{P_{\rm m}(k) P_X(k)}{P_{{\rm m}X}(k)^2}.$$

$P_{{\rm m}X}(k)$; matter density field – biased objects cross power spectrum

$P_{\rm m}(k)$; matter density field power spectrum

On large scales,

$$r(k) \simeq 1 + \left(\frac{25}{9}\tau_{\rm NL} - 4 f_{\rm NL}^2\right) \frac{1}{b_1(k)^2 \mathcal{M}(k)^2} \left[\int \frac{d^3p}{(2\pi)^3} c_2^{\rm L}(\mathbf{p}, -\mathbf{p}) P_{\rm L}(p)\right]^2$$

Directly dependent on the inequality !

r(k)-1 = 0, or < 0, or > 0 ??

$$\tau_{\rm NL} \geq \left(\frac{6}{5} f_{\rm NL}\right)^2$$

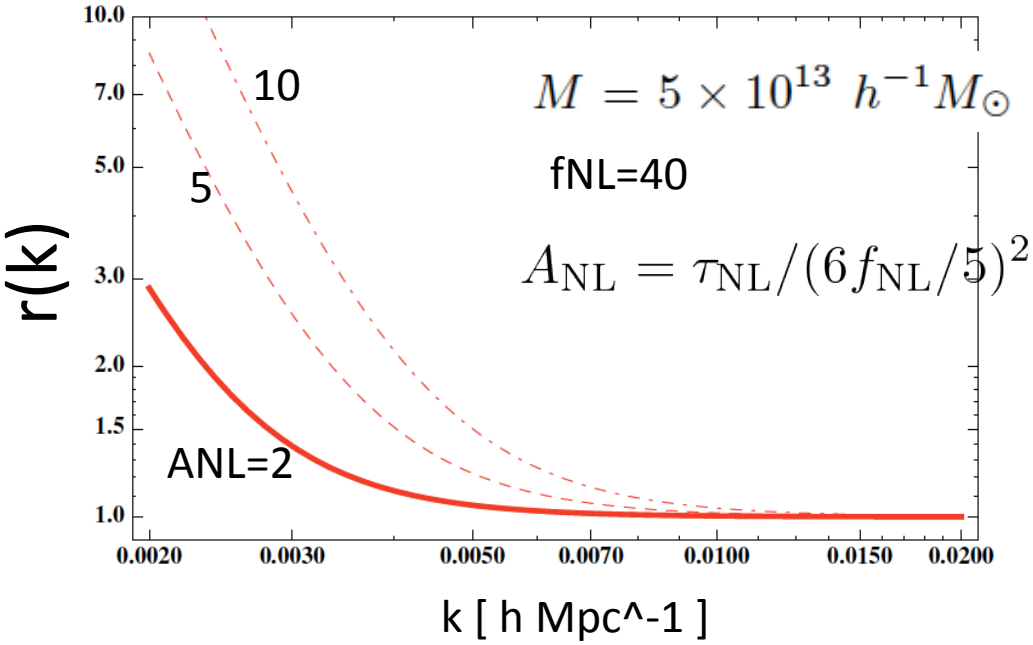

Result

$$
\begin{aligned}
B_{\rm bis}^{\rm tree} &= 2f_{\rm NL}\Gamma_X^{(1)}(\mathbf{k}_1)\Gamma_X^{(1)}(\mathbf{k}_2)\Gamma_X^{(1)}(\mathbf{k}_3)\mathcal{M}(k_1)\mathcal{M}(k_2)\mathcal{M}(k_3)\Big[P_\Phi(k_1)P_\Phi(k_2)+2\text{ perms.}\Big].\\
B_{g_{\rm NL}} &= 6g_{\rm NL}\Bigg\{\Gamma_X^{(1)}(\mathbf{k}_1)\Gamma_X^{(1)}(\mathbf{k}_2)\mathcal{M}(k_1)\mathcal{M}(k_2)P_\Phi(k_1)P_\Phi(k_2)\\
&\quad\times\int\frac{d^3p}{(2\pi)^3}\Gamma_X^{(2)}(\mathbf{p},\mathbf{k}_3-\mathbf{p})\mathcal{M}(p)\mathcal{M}(|\mathbf{k}_3-\mathbf{p}|)P_\Phi(p)\left[1+\frac{1}{2}\left(\frac{P_\Phi(|\mathbf{k}_3-\mathbf{p}|)}{P_\Phi(k_1)}+\frac{P_\Phi(|\mathbf{k}_3-\mathbf{p}|)}{P_\Phi(k_2)}\right)\right]+2\text{ perms.}\Bigg\},\\
B_{\tau_{\rm NL}} &= \frac{25}{9}\tau_{\rm NL}\Bigg\{\Gamma_X^{(1)}(\mathbf{k}_1)\Gamma_X^{(1)}(\mathbf{k}_2)\mathcal{M}(k_1)\mathcal{M}(k_2)\left[P_\Phi(k_1)+P_\Phi(k_2)\right]P_\Phi(k_3)\\
&\qquad\times\int\frac{d^3p}{(2\pi)^3}\Gamma_X^{(2)}(\mathbf{p},\mathbf{k}_3-\mathbf{p})\mathcal{M}(p)\mathcal{M}(|\mathbf{k}_3-\mathbf{p}|)P_\Phi(p)+2\text{ perms.}\Bigg\}\\
&\quad+\frac{25}{9}\tau_{\rm NL}\Bigg\{\Gamma_X^{(1)}(\mathbf{k}_1)\Gamma_X^{(1)}(\mathbf{k}_2)\mathcal{M}(k_1)\mathcal{M}(k_2)P_\Phi(k_1)P_\Phi(k_2)\\
&\qquad\times\int\frac{d^3p}{(2\pi)^3}\Gamma_X^{(2)}(\mathbf{p},\mathbf{k}_3-\mathbf{p})\mathcal{M}(p)\mathcal{M}(|\mathbf{k}_3-\mathbf{p}|)P_\Phi(|\mathbf{k}_1+\mathbf{p}|)+2\text{ perms.}\Bigg\}\\
&\quad+\frac{25}{9}\tau_{\rm NL}\Bigg\{\Bigg[\Gamma_X^{(1)}(\mathbf{k}_1)\Gamma_X^{(1)}(\mathbf{k}_2)\mathcal{M}(k_1)\mathcal{M}(k_2)P_\Phi(k_1)\int\frac{d^3p}{(2\pi)^3}\Gamma_X^{(2)}(\mathbf{p},\mathbf{k}_3-\mathbf{p})\\
&\qquad\times\mathcal{M}(p)\mathcal{M}(|\mathbf{k}_3-\mathbf{p}|)P_\Phi(p)P_\Phi(|\mathbf{k}_3-\mathbf{p}|)\left[1+\frac{P_\Phi(|\mathbf{k}_2+\mathbf{p}|)}{2P_\Phi(k_1)}\right]+(\mathbf{k}_1\leftrightarrow\mathbf{k}_2)\Bigg]+2\text{ perms.}\Bigg\}.
\end{aligned}
\tag{19}
$$

- Other contribution from fNL-fNL

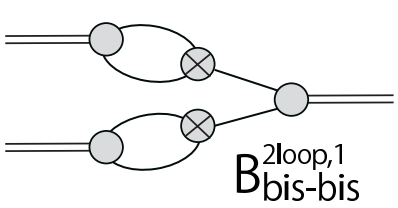

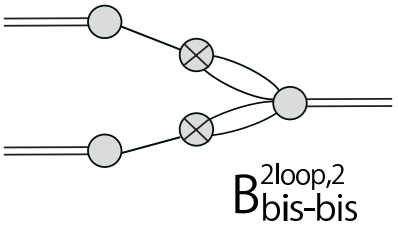

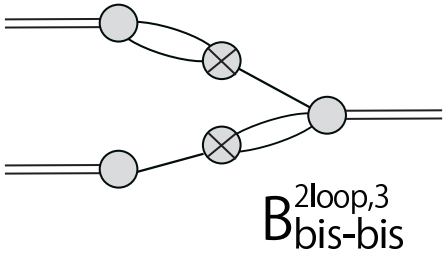

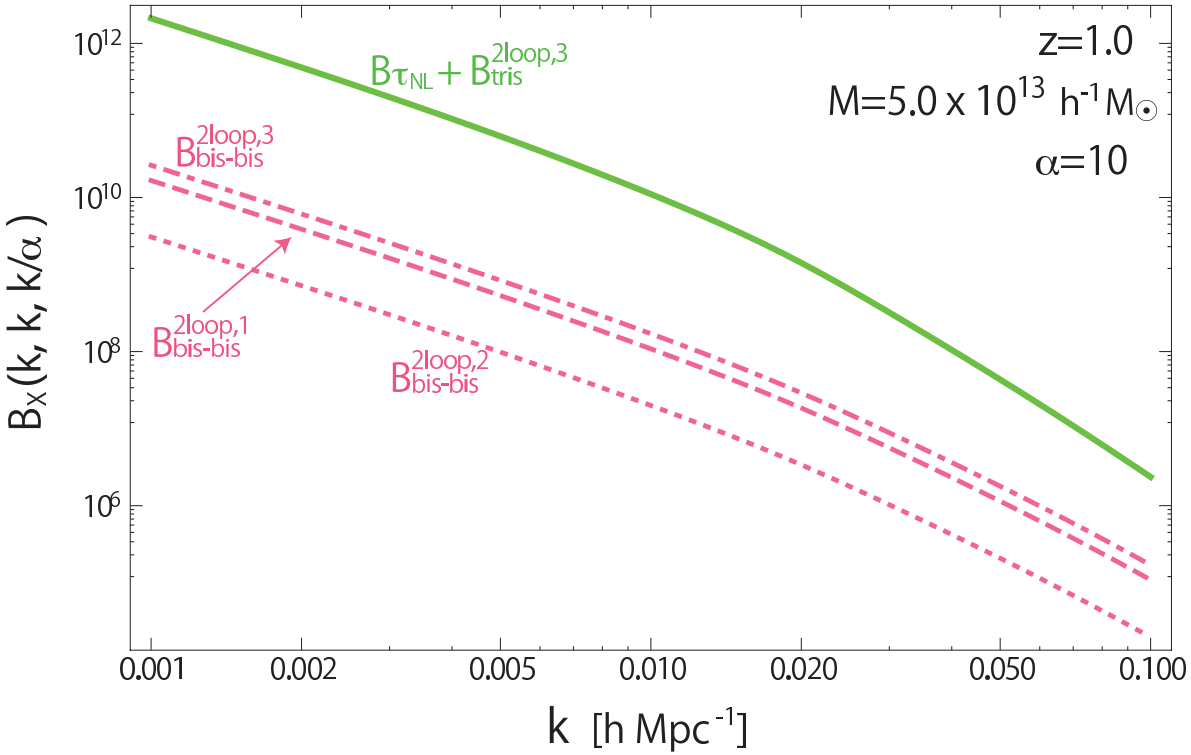

Basically subdominant

We have checked
There are not any other contributions.

(up to primordial trispectrum)

(much higher order ??)

Simple picture

- Halo bias **bias = P_h / P_m**

•matter density fluctuations (matter power spectrum; P_m(k))

⇓ ***biased***

•Halo number density fluctuations (halo power spectrum; P_h(k))

(peaky objects)

Gaussian + linear ➔ linear (constant) bias

Kaiser (1984), Bardeen, Bond, Kaiser and Szalay (1986), Sheth, Mo and Thormen(2001), …

⇕

non-Gaussian case ? ➔ scale-dependent bias

Dalal et al.(2008), Slosar et al.(2008), …

Simple picture

$$\Phi = \Phi_{\rm G} + f_{\rm NL}\Phi_{\rm G}^2$$

decomposition;

$$\Phi_{\rm G} = \Phi_{\rm long} + \Phi_{\rm short}$$

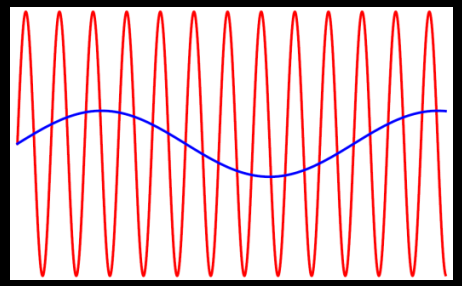

Gaussian

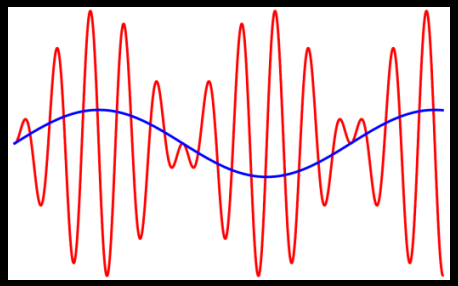

non-Gaussian

due to the non-Gaussianity
➔ long-short mode coupling !

Blue; long mode (background)
Red; short mode (peak)

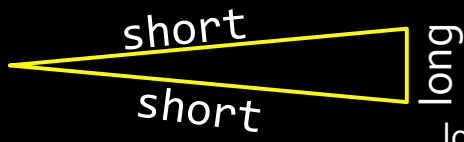

local-type
(in k-space)

• collapsed objects ➔➔ short mode fluctuations

$$\delta_{\rm short} = \delta_{\rm G}(1 + 2f_{\rm NL}\Phi_{\rm long}(x))$$

$$\sigma^2_{\rm short} \equiv \langle \delta^2_{\rm short} \rangle$$;variance

$$\Phi_{\rm long} \propto \delta_{\rm long}/k^2$$

$\Phi \rightarrow \delta$
Poisson eq. $\Delta\Phi = 4\pi G\rho\delta$

➔ modulation of the variance of the short mode !!

Through the local-type non-Gaussianity, the formation process of the objects can be modified ➔ scale-dependence of the bias